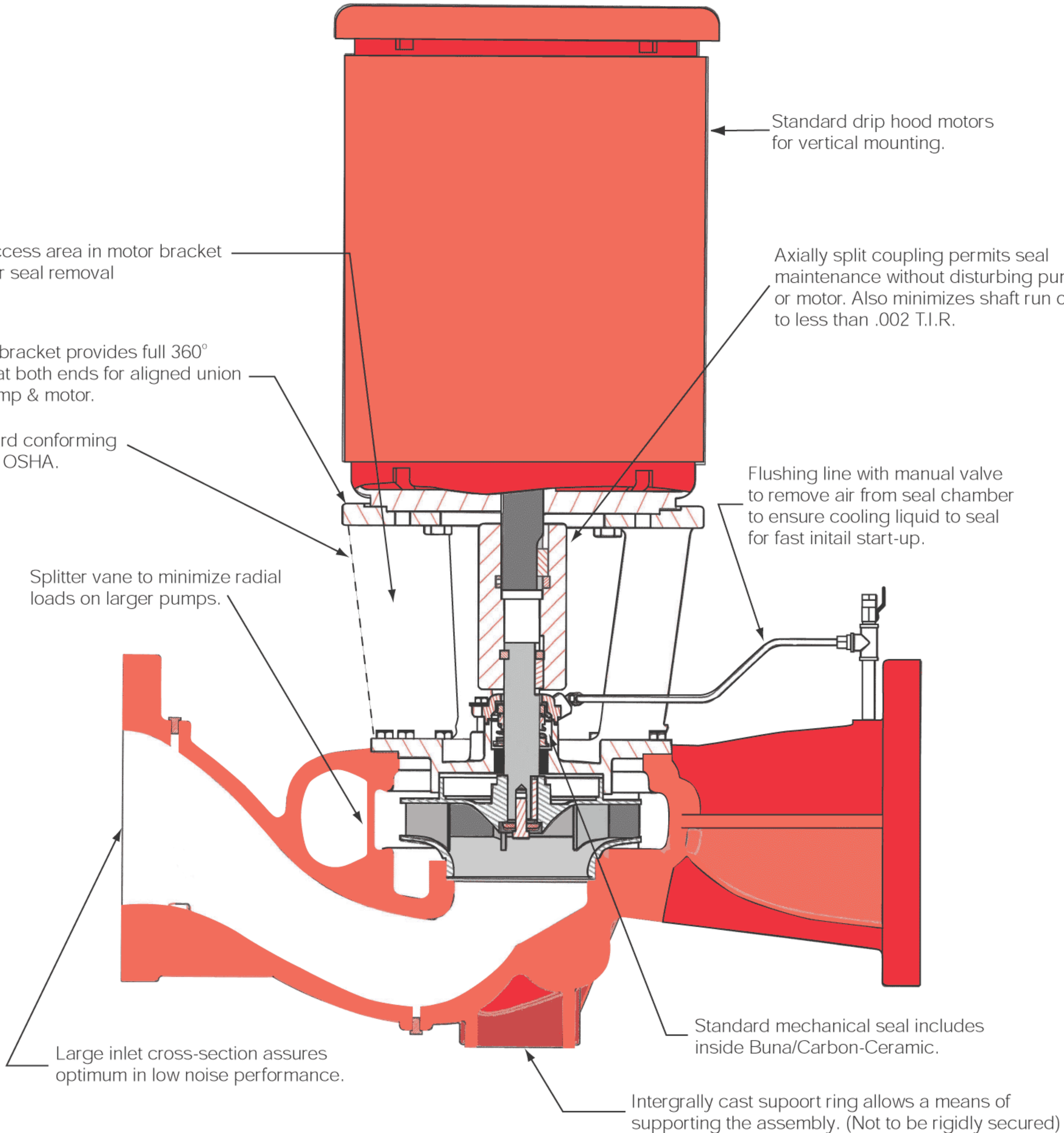
Standard drip hood motors for vertical mounting.
Wider access area in motor bracket for easier seal removal
Axially split coupling permits seal maintenance without disturbing pump or motor. Also minimizes shaft run out to less than .002 T.I.R.
Rigid motor bracket provides full 360° registration at both ends for aligned union between pump & motor.
Coupler guard conforming to ANSI and OSHA.
Flushing line with manual valve to remove air from seal chamber to ensure cooling liquid to seal for fast initail start-up.
Splitter vane to minimize radial loads on larger pumps.
Standard mechanical seal includes inside Buna/Carbon-Ceramic.
Large inlet cross-section assures optimum in low noise performance.
Intergrally cast supoort ring allows a means of supporting the assembly. (Not to be rigidly secured)